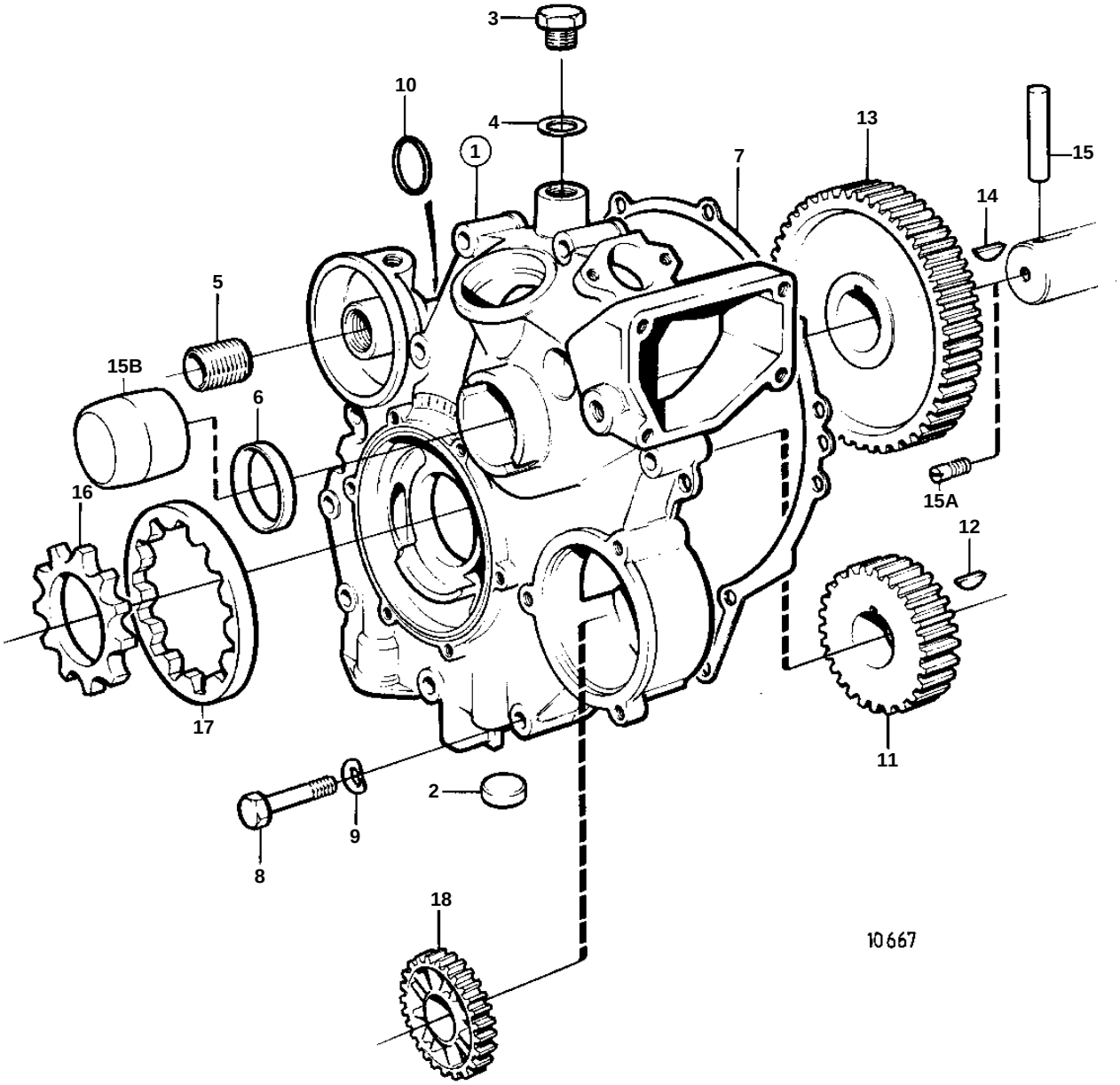
3
10
4
1
13
7
15
14
5
15B
6
16
15A
12
17
11
2
9
8
18
10667

REF	PART NO.	QTY	DESCRIPTION		SEE SEC.	NOTES
1	860199	1	Timing gear casing, TIMING GEAR COVER			SN2300046356-
						REPL BY 860546
					02A-8230	
2	946779	1	· Cap plug			
3	960632	1	· Plug			
4	957181	1	· Gasket	IK		
5	840274	1	· Nipple			
6	840446	1	Sealing ring	IK		
7	859048	1	Gasket	IK		
8	955301	5	Screw			L = 55 MM. FOR ENGINES WITH CIRCULATION PUMP.
	955305	3	Screw			L = 75 MM. FOR ENGINES WITH CIRCULATION PUMP.
9	941907	8	Spring washer			
10	943177	1	O-ring	IK		
11	840350	1	Gear			CRANKSHAFT GEAR
12	910118	1	Woodruff key			
13	858269	1	Gear			CAMSHAFT GEAR
14	910118	1	Woodruff key			
15B	859110	1	Plug			FOR ENGINES WITHOUT STARTING CRANK.
16	840552	1	Gear			
17	840553	1	Gear			
18	858526	1	Gear, SEA WATER PUMP			SEE GROUP 2B